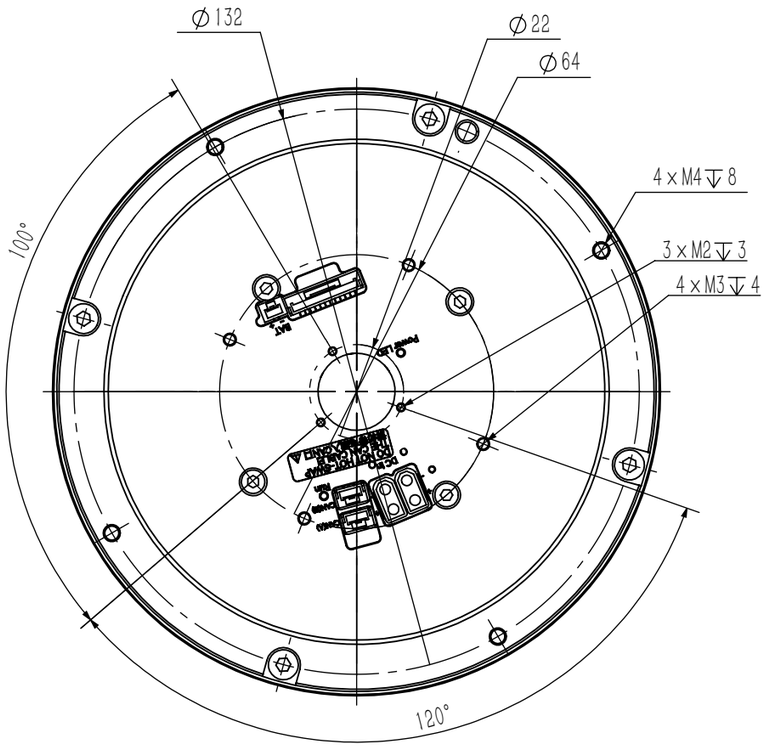
Ø132
Ø22
Ø64
4×M4↧8
3×M2↧3
4×M3↧4
100°
120°

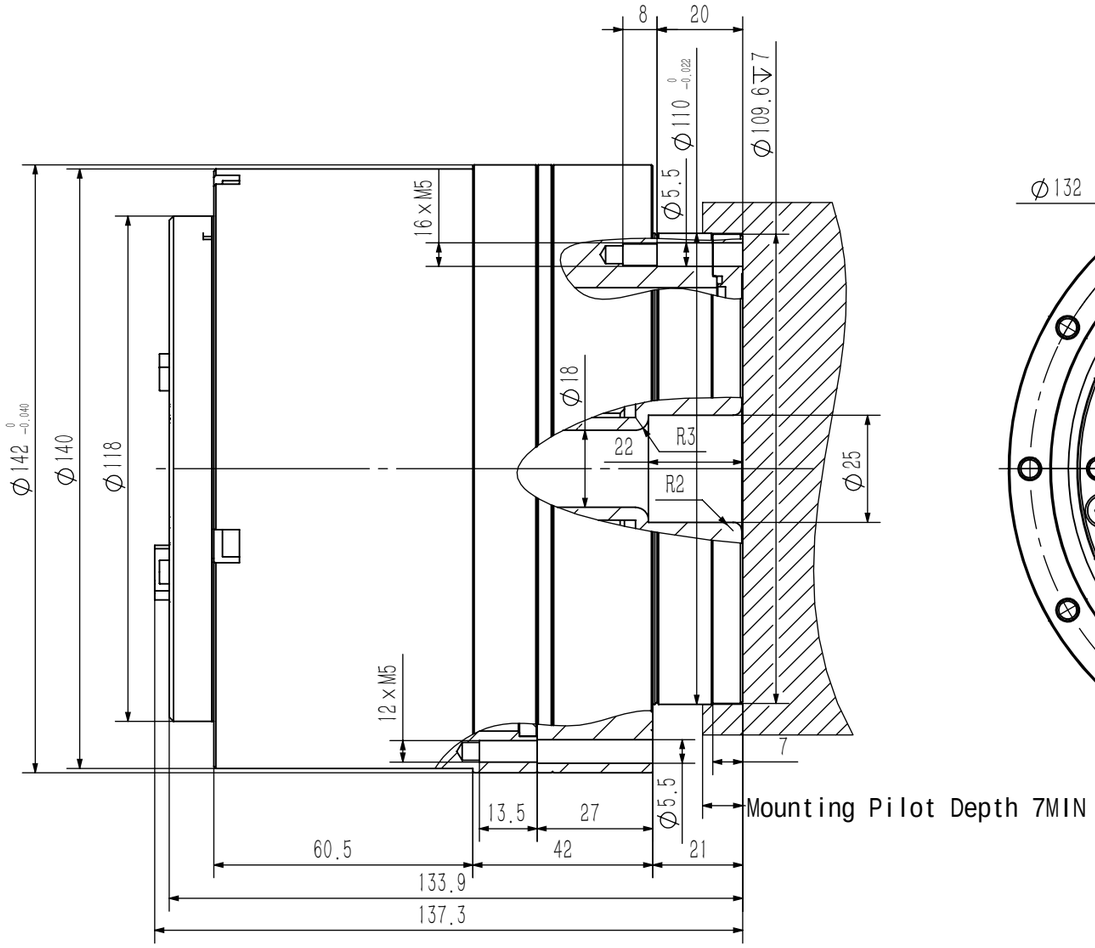
8
20
Ø110 0 -0.022
Ø109.6↧7
Ø5.5
16×M5
Ø18
Ø142 0 -0.040
Ø140
Ø118
22
R3
R2
Ø25
12×M5
7
Ø5.5
13.5
27
Mounting Pilot Depth 7MIN
60.5
42
21
133.9
137.3

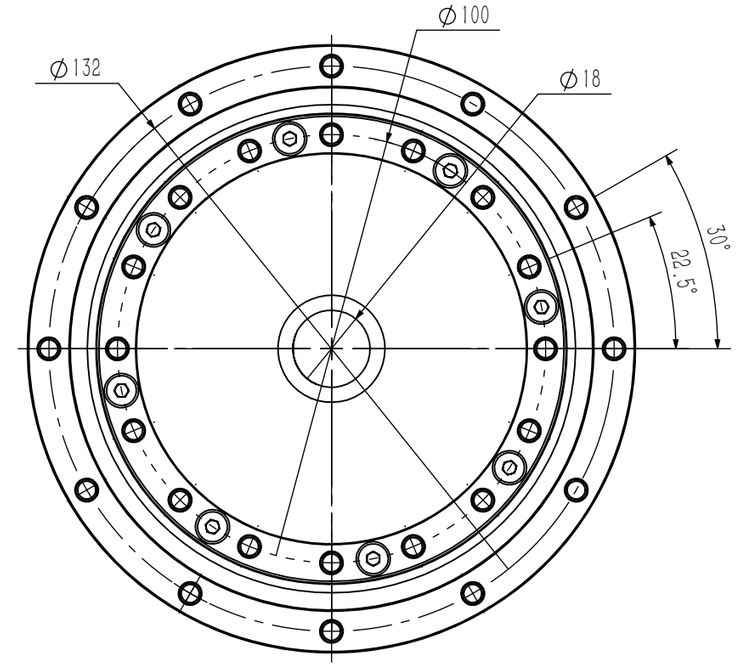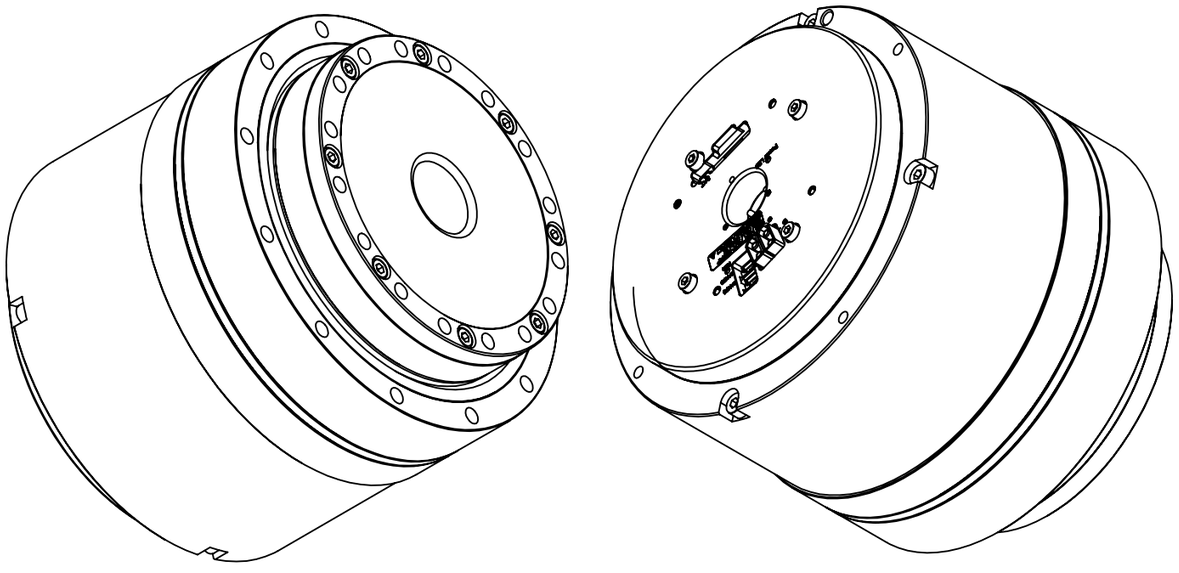
Ø100
Ø132
Ø18
30°
22.5°