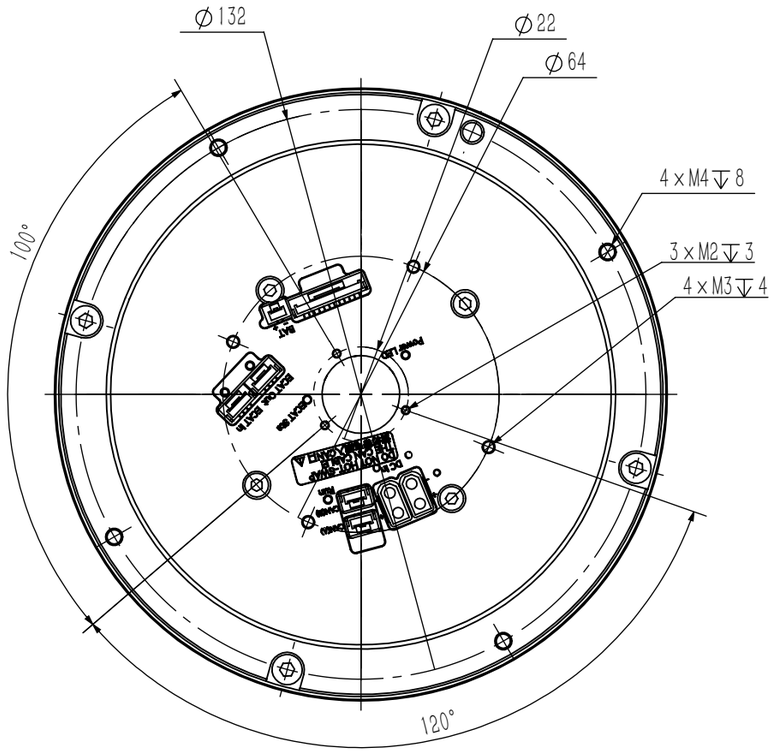
Ø132
Ø22
Ø64
4×M4↧8
3×M2↧3
4×M3↧4
100°
120°

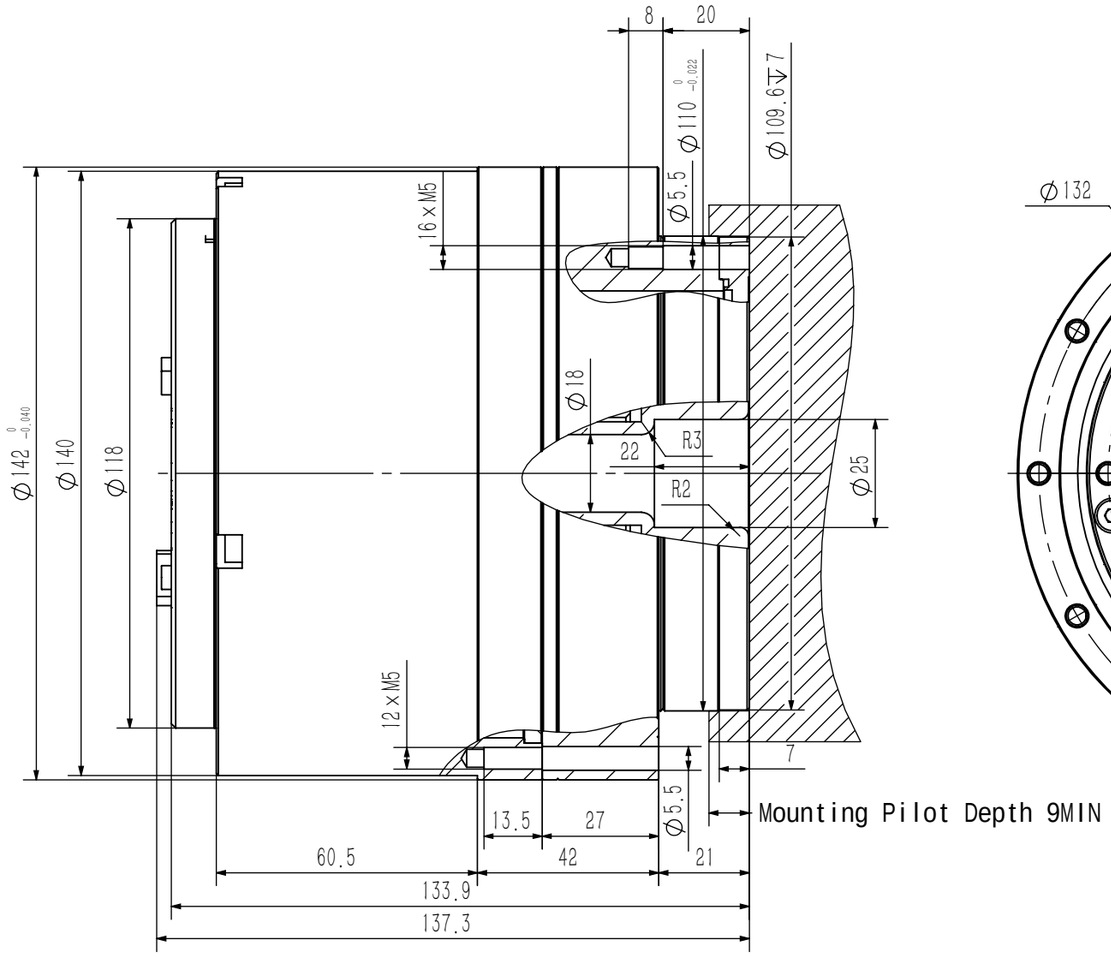
8
20
Ø110 0 -0.022
Ø109.6↧7
Ø5.5
16×M5
Ø18
22
R3
R2
Ø25
Ø142 0 -0.040
Ø140
Ø118
12×M5
7
Ø5.5
13.5
27
42
21
60.5
133.9
137.3
Mounting Pilot Depth 9MIN

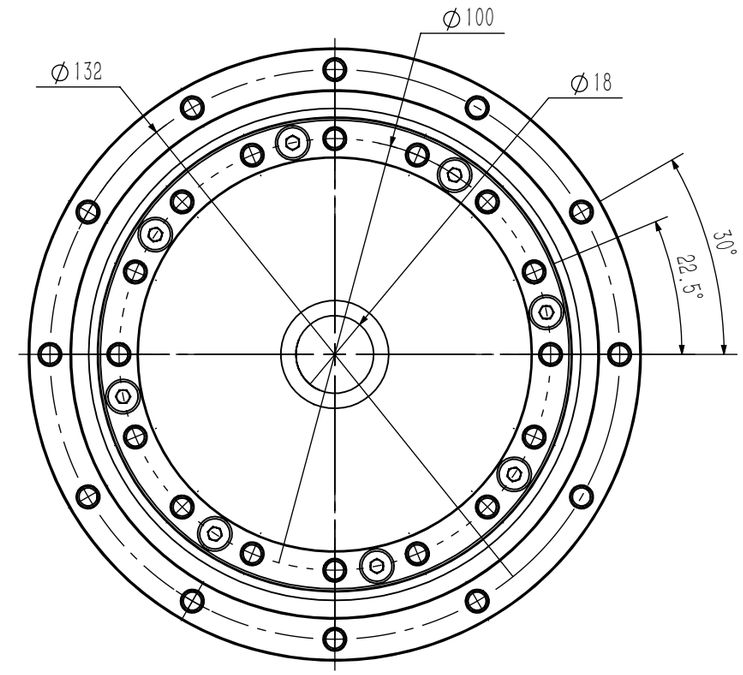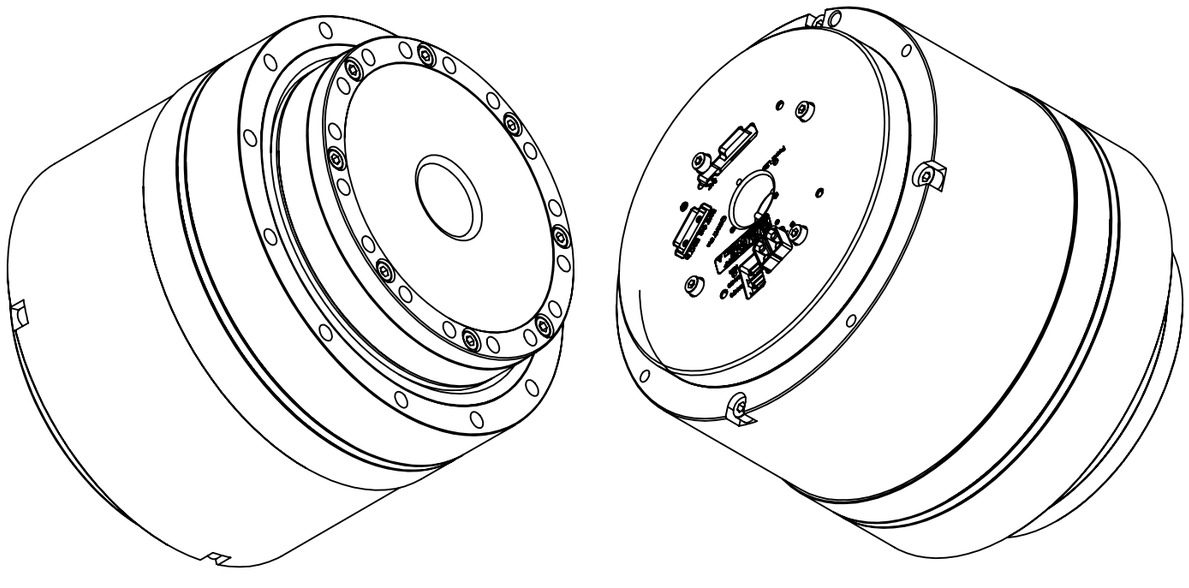
Ø100
Ø132
Ø18
30°
22.5°