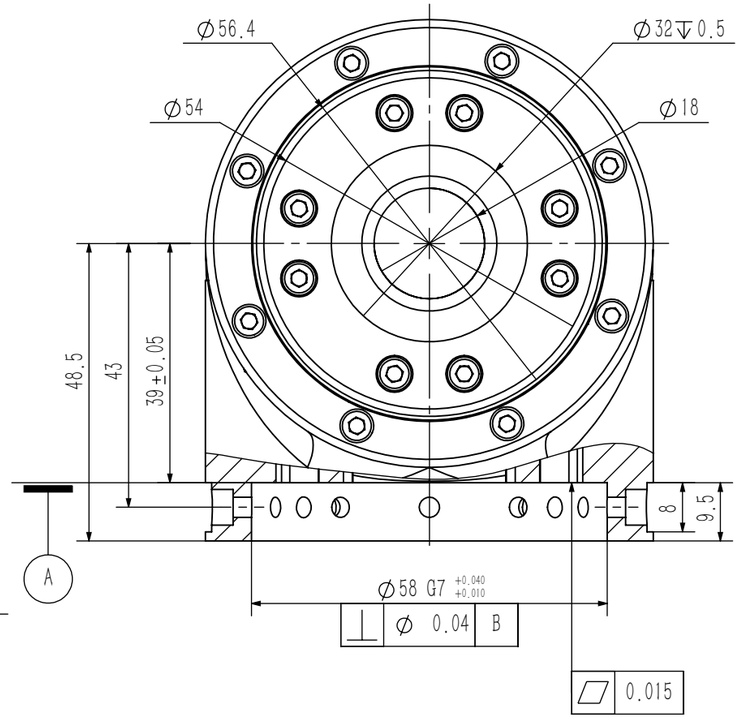
⌀56.4
⌀32↧0.5
⌀54
⌀18
48.5
43
39±0.05
8
9.5
A
⌀58 G7 +0.040 +0.010
⊥ ⌀ 0.04 B
0.015

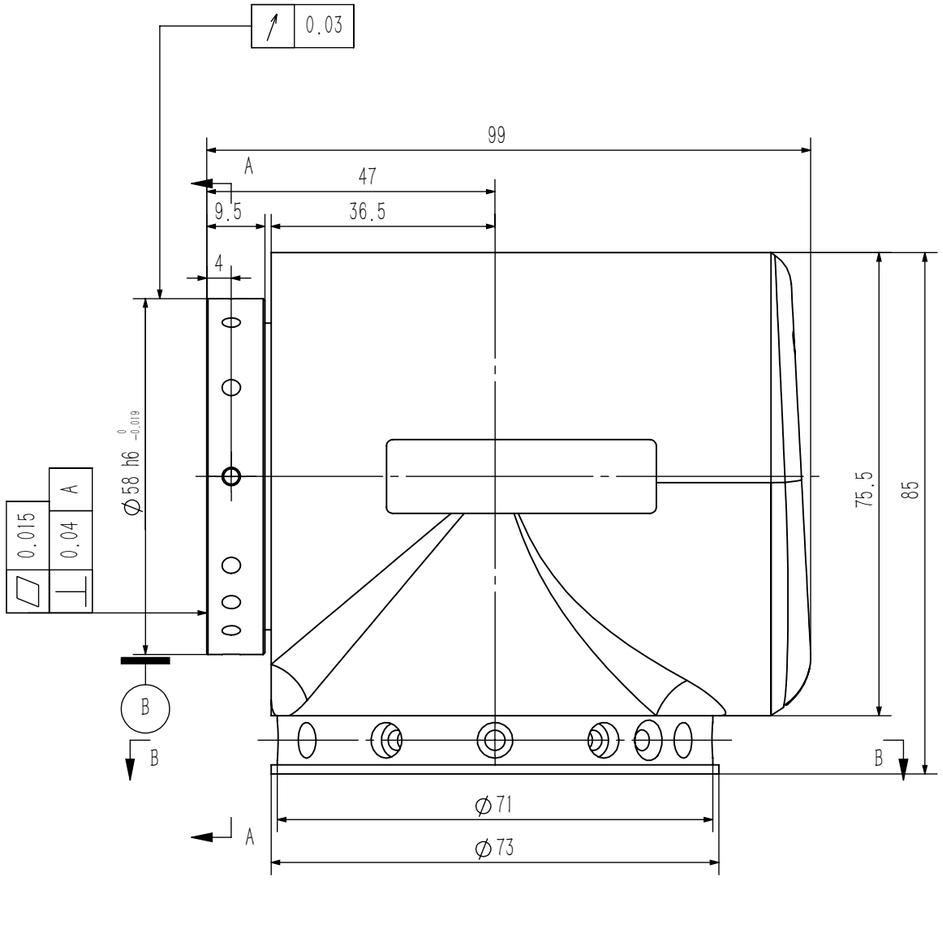
0.03
99
A
47
9.5
36.5
4
⌀58 h6 0 -0.019
0.015
0.04 A
B
75.5
85
⌀71
⌀73

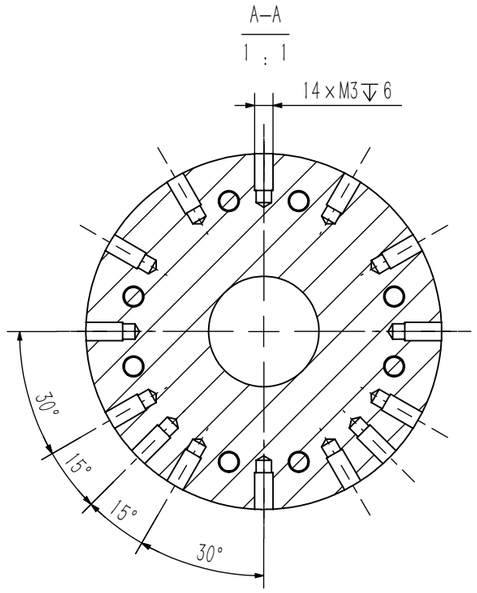
A–A
1 : 1
14×M3↧6
30°
15°
15°
30°

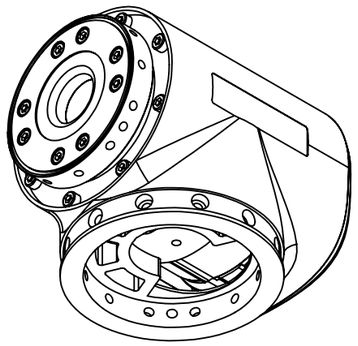

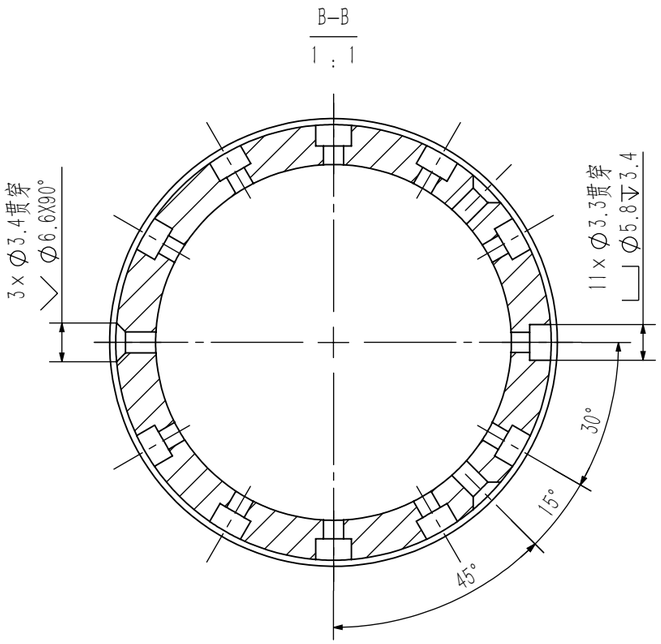
B–B
1 : 1
3×⌀3.4贯穿
⌀6.6X90°
11×⌀3.3贯穿
⌀5.8↧3.4
30°
15°
45°