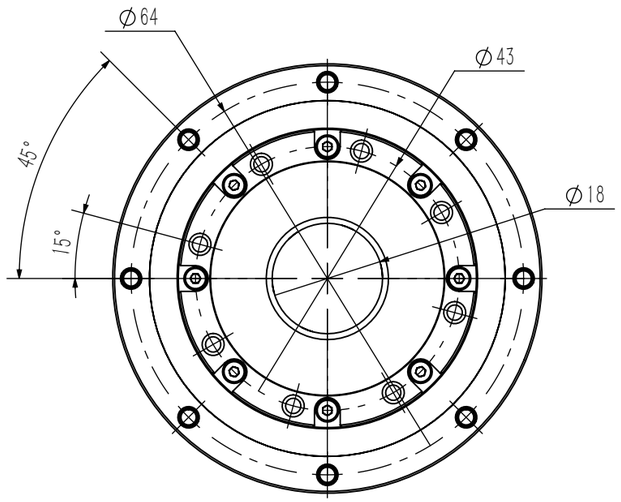
Ø64
Ø43
Ø18
45°
15°

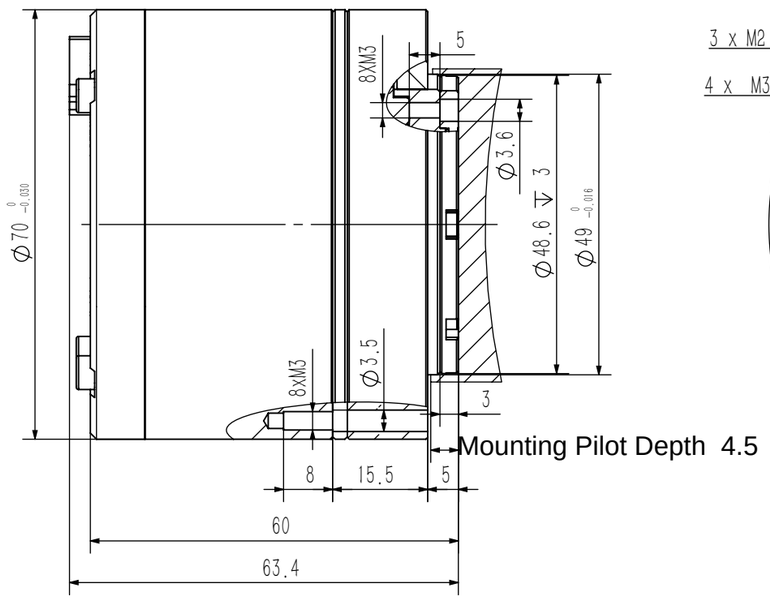
5
8XM3
Ø3.6
Ø48.6 ↧ 3
Ø49 0 -0.016
Ø70 0 -0.030
Ø3.5
8XM3
3
Mounting Pilot Depth 4.5
8
15.5
5
60
63.4

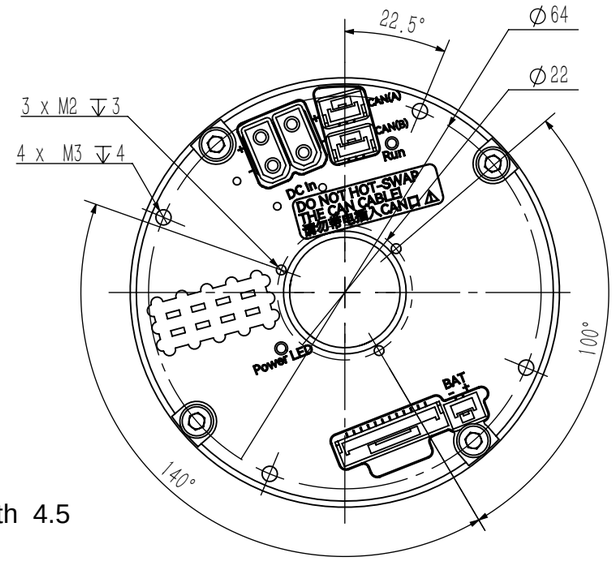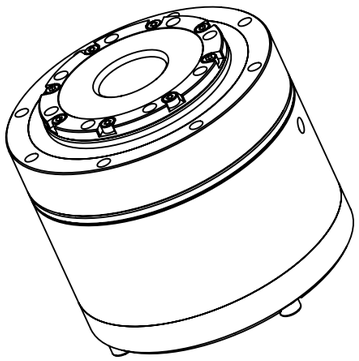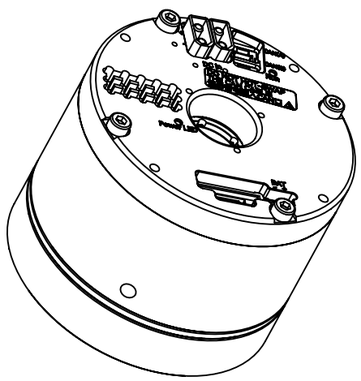
22.5°
Ø64
Ø22
3 x M2 ↧ 3
4 x M3 ↧ 4
CAN(A)
CAN(B)
Run
DC In
DO NOT HOT-SWAP THE CAN CABLE
CAN
Power LED
BAT
100°
140°