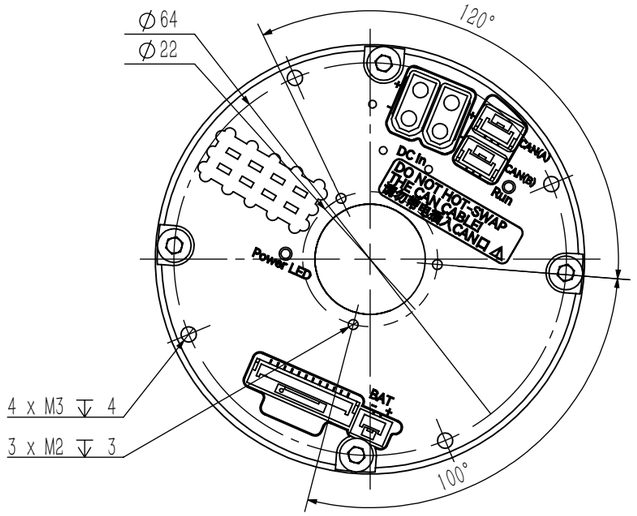
Ø64
Ø22
120°
DC In
CAN(A)
CAN(B)
Run
DO NOT HOT-SWAP THE CAN CABLE
Power LED
BAT
4 x M3 ↧ 4
3 x M2 ↧ 3
100°

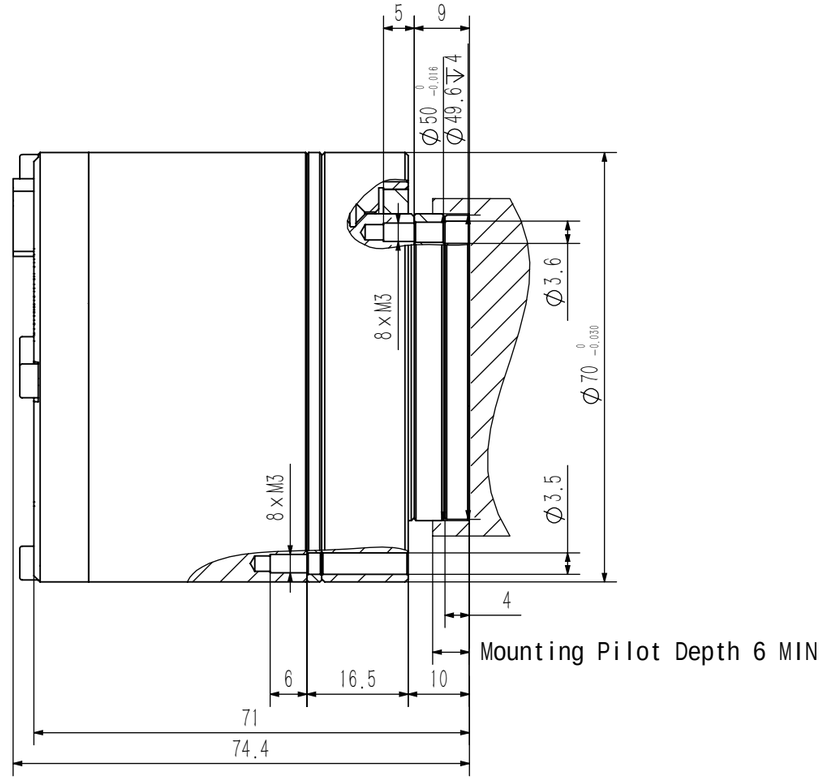
5
9
Ø50 0 -0.016
Ø49.6 ↧ 4
8×M3
Ø3.6
Ø70 0 -0.030
8×M3
Ø3.5
4
Mounting Pilot Depth 6 MIN
6
16.5
10
71
74.4

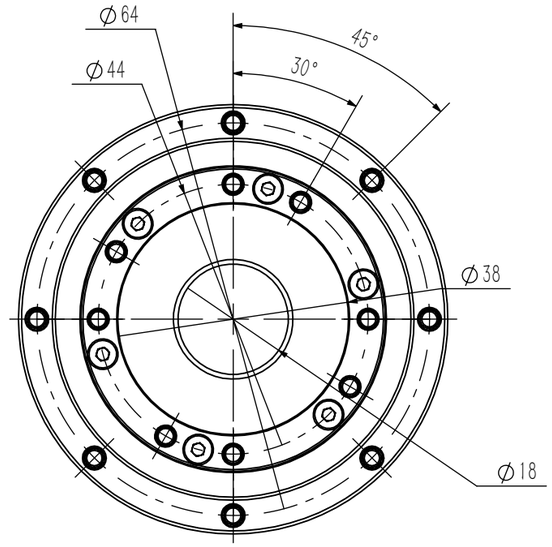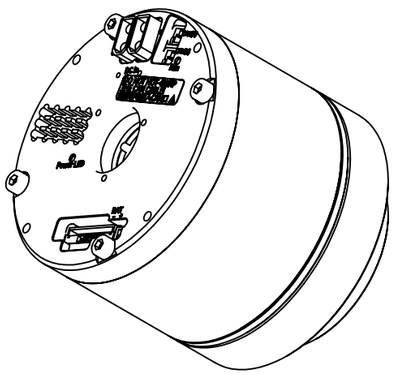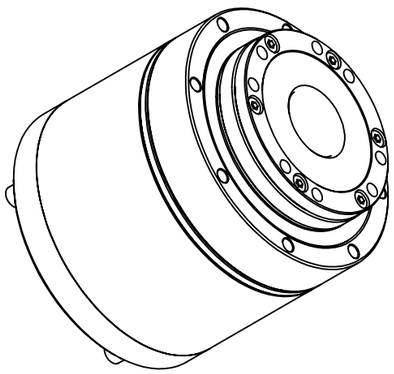
Ø64
Ø44
45°
30°
Ø38
Ø18