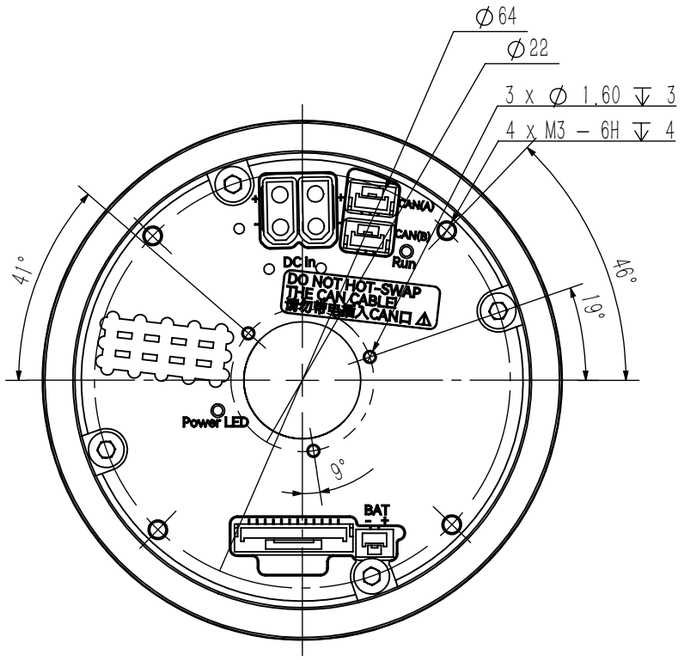
Ø64
Ø22
3 x Ø 1.60 ↧ 3
4 x M3 – 6H ↧ 4
41°
46°
19°
9°
CAN(A)
CAN(B)
Run
DC In
DO NOT HOT-SWAP
THE CAN CABLE!
CAN
Power LED
BAT

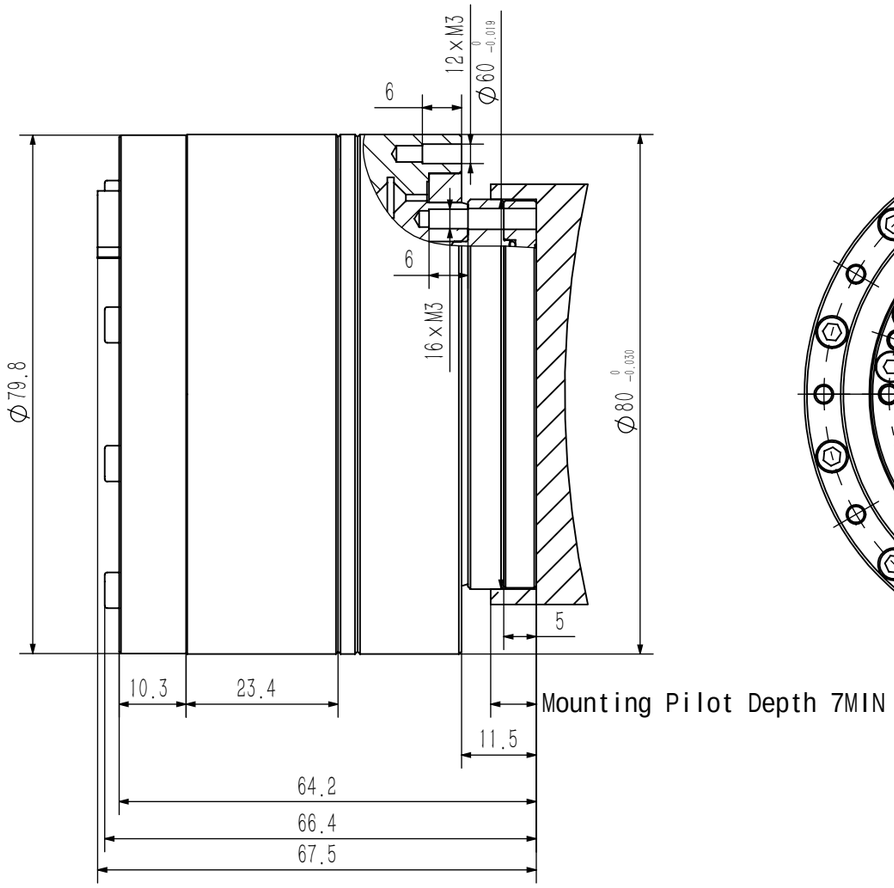
12 x M3
Ø60 0 -0.019
6
6
16 x M3
Ø79.8
Ø80 0 -0.030
5
10.3
23.4
Mounting Pilot Depth 7MIN
11.5
64.2
66.4
67.5

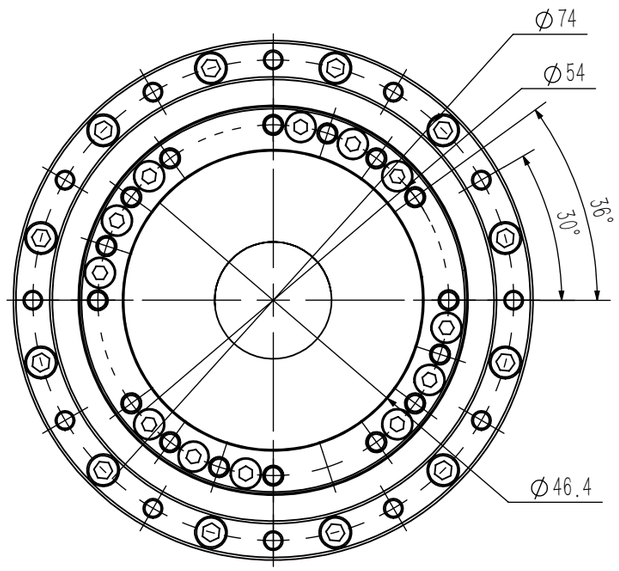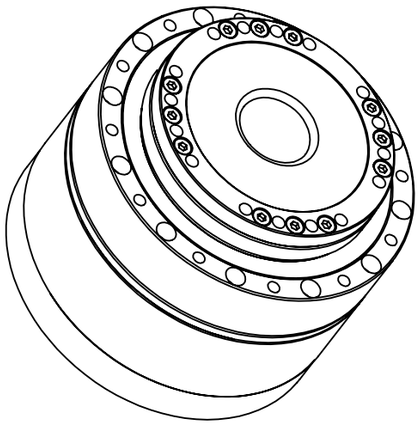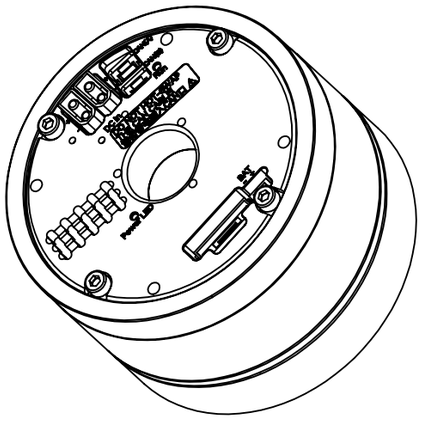
Ø74
Ø54
30°
36°
Ø46.4