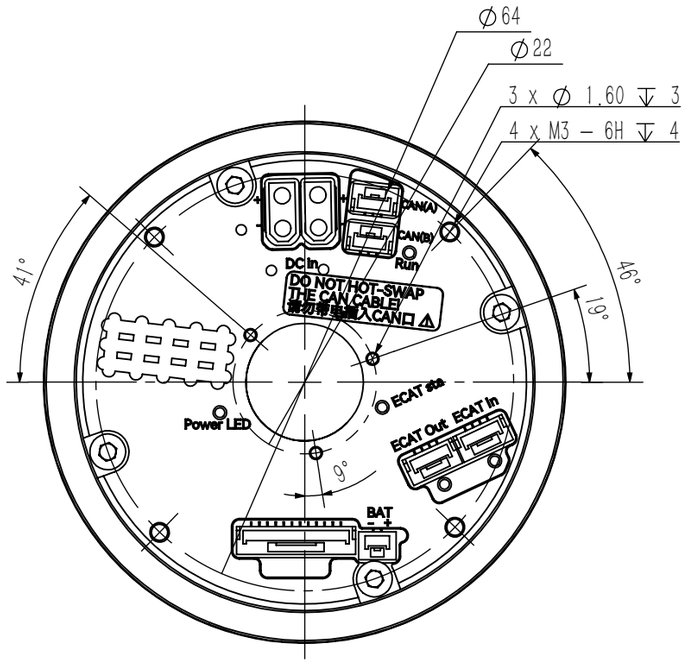
∅64
∅22
3 x ∅ 1.60 ↧ 3
4 x M3 – 6H ↧ 4
41°
46°
19°
9°
CAN(A)
CAN(B)
Run
DC In
DO NOT HOT-SWAP THE CAN CABLE!
CAN
ECAT Sta
Power LED
ECAT Out
ECAT In
BAT

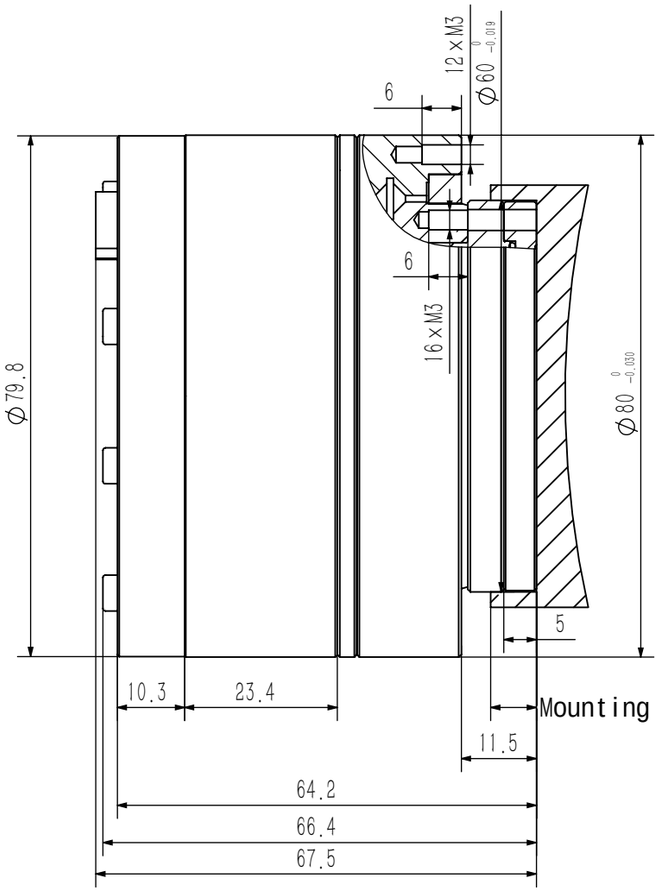
12 x M3
∅60 0 −0.019
6
6
16 x M3
∅79.8
∅80 0 −0.030
5
10.3
23.4
Mounting Pilot Depth 7MIN
11.5
64.2
66.4
67.5

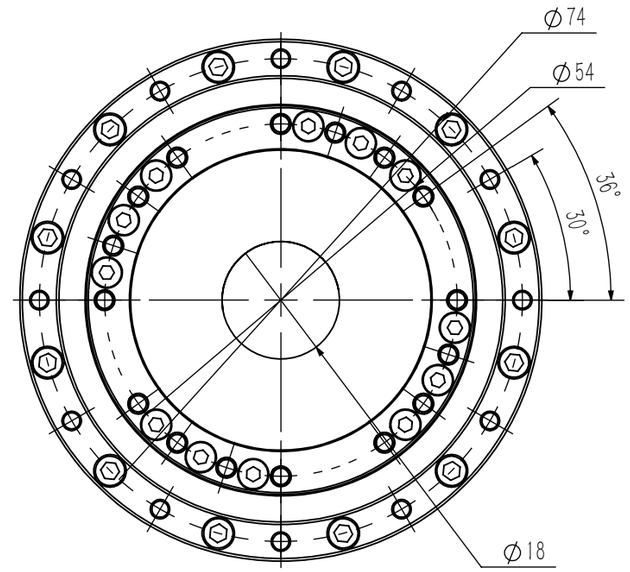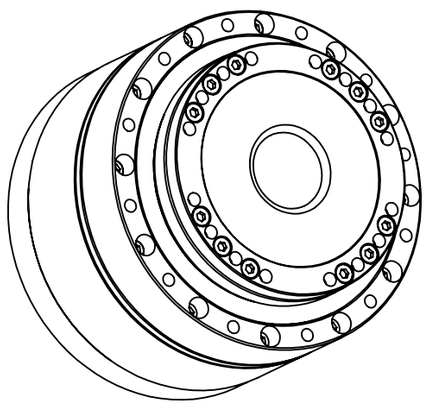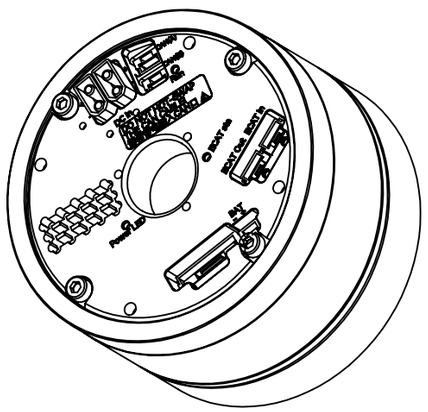
∅74
∅54
36°
30°
∅18